V1.2

2025.02

D-125AI

User Manual

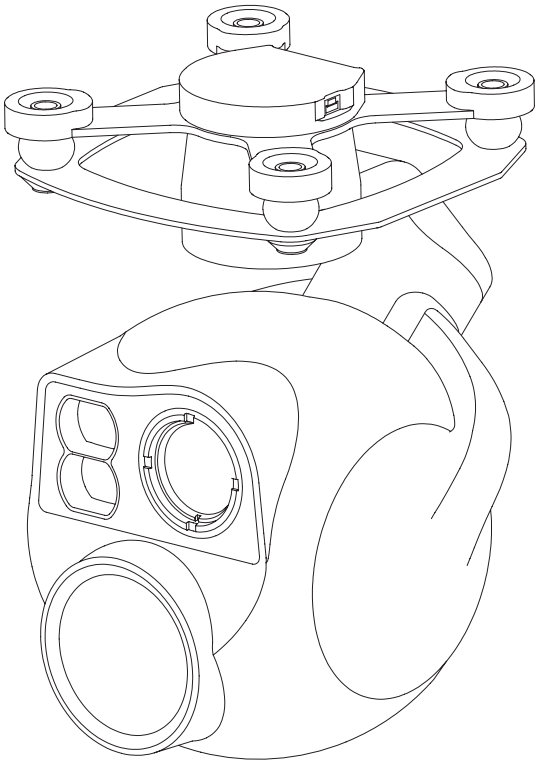

©2025 XF All Rights Reserved

Using this Manual – Legend

Important	Tips	Explanation

Revision History

Date	Document Version
2024.06.13	V1.0

Date	Document Version
2024.10.14	V1.1

Date	Document Version
2025.02.08	V1.2

Caution

1. When not in use, store the D-125AI in the package box. The recommended storage environment is a relative humidity less than 40% at a temperature of 20±5° C. If the lenses fog up. The water vapor will usually dissipate after turning on the device for a while.
2. Do not expose the thermal camera lens to a strong energy source such as sun, lava or laser beam. The temperature of the observation target should not exceed 600°C , otherwise it will cause permanent damage.
3. Do not place the product under direct sunlight, in areas with poor ventilation, or near a heat source such as a heater.
4. Do not frequently power on/off the product. After it is turned off, wait at least 30 seconds before turning back on, otherwise the product life will be affected.
5. Make sure the pod port and pod surface are free from any liquid before installation.
6. Make sure the pod is securely installed onto the aircraft, the microSD card slot cover is clean and firmly in place.
7. Make sure the pod surface is dry before opening the microSD card slot cover.
8. Do not plug or unplug the microSD card during use.
9. Do not touch the surface of the camera lenses and keep it away from hard objects. As doing so may lead to blurred images and affect the imaging quality.
10. Clean the surface of the camera lenses with a soft, dry, clean cloth. Do not use alkaline detergents.
11. When not receiving valid carrier INS data, the yaw shaft of the pod will drift about 15 degrees per hour because of the earth rotation. To make sure the pod attitude corrects, it is necessary to transmit valid carrier INS data, usually the GNSS should be positioning.
12. When its damping platform tilted over 45° , the pod will trigger protection mode and return to its neutral position. (except in FPV mode)

Catalog

Introduction 1
- Synopsis 1
- Characteristics 2
- Overview 3
- Ports Definition 4

Installation 5

Configuration & Upgrading 6
- AICore Upgrading 6
- GCU Upgrading 7
- Gimbal Upgrading 7

Real-time Video Playing 7

Appendix 1 Dimensions 8

Appendix 2 SEI Data Structure 9

Appendix 3 MAVLink Configuration 10
- ArduPilot 10
- PX4 11

Appendix 4 MAVlink Communication Process 12

Appendix 5 Wiring Diagram of Connecting to Open Source Autopilot 13

Introduction

Synopsis

The D-125AI equips with a high accuracy 3-axis nonorthogonal pod, an 120x hybrid zoom camera and a long-wave thermal camera, which can provide visual and infrared images simultaneously. Thanks to the laser range finder, the D-125AI can provide the location of a target and the distance to it that improves working efficiency.

The D-125AI have AI multi-object detection and tracking function. The gimble camera can intelligently identify the persons and vehicles in the image, and constantly track one of them.

The D-125AI can be mounted tool-lessly onto multiple carriers, whether downward or upward. With the GCU and the Dragonfly software, user can watch the image from the camera and control the pod real-timely on a computer.

Characteristics

- Features AI multi-object detection and tracking, which can constantly track one of the persons and vehicles intelligently identified in the image.
- Carries an 120x hybrid zoom camera, a thermal camera and a laser range finder.
- Low-profile spherical shape and 3-axis nonorthogonal mechanical stabilized structure, minimize the gyration radius and the wind resistance of the pod. The D125AI is able to spin continually around its yaw axis.
- Supports network, UART and S.BUS control. Supports both private protocol and MAVlink protocol.
- Thanks to the Dual-IMU complementary algorithms with IMU temperature control and carrier AHRS fusion, the D-125AI provides a stabilization accuracy at ±0.01° .
- Can be mounted onto multiple carriers, whether downward or upward.
- With the Dragonfly software, user can watch the image and control the gimba without protocol ducking.
- Photos and videos can be downloaded online through the "Gallery" function of the Dragonfly software.
- With the customized QGC software, all the functions of the pod can be achieved in conjunction with an open source autopilot.
- Screen supports overlaying OSD information such as latitude, longitude and altitude. Image supports shooting point coordinate EXIF save. Video stream upports SEI stacking.
- 20~53 VDC wide voltage input.

Overview

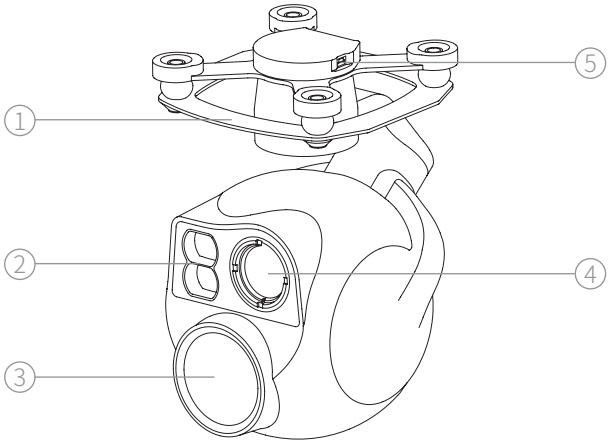

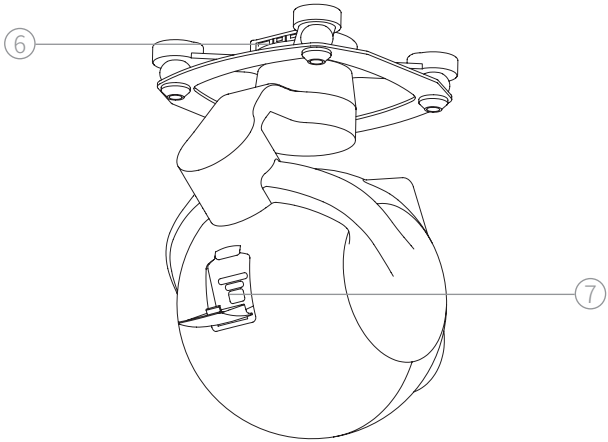

1. Damping Platform
2. Laser Range Finder
3. Zoom Camera
4. Thermal Camera
5. Upgrade Port
6. Control Ports
7. MicroSD Card Slot

Ports Definition

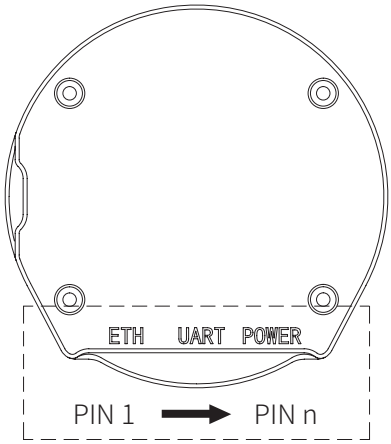

Port	Description	Header	Pin	Definition
ETH	Network port. For camera configuration, camera upgrading, GCU configuration, private protocol control and video output	SM06B-GHS-TB	1	NC
			2	NC
			3	ETH_Tx+
			4	ETH_Tx-
			5	ETH_Rx+
			6	ETH_Rx-
UART	TTL serial port. For GCU configuration, GCU upgrading, private protocol control and MAVLink protocol control	SM03B-GHS-TB	1	GND
	S.BUS in port. Compatible with S.BUS1 standard such as FASST and SFHSS, and S.BUS2 such as FASSTest		2	UART_Rx (0~3.3V)
			3	UART_Tx (0~3.3V) / S.BUS In
POWER	Power in. Operating Voltage: 20~53VDC	SM05B-GHS-TB	1	GND
			2	
			3	NC
			4	Power In
			5	

Installation

Align and insert the 4 pins into the locating holes of the mount platform. Press down the lock catch to fix the pod. The pod can be also fixed with screws through the holes on the damping platform.

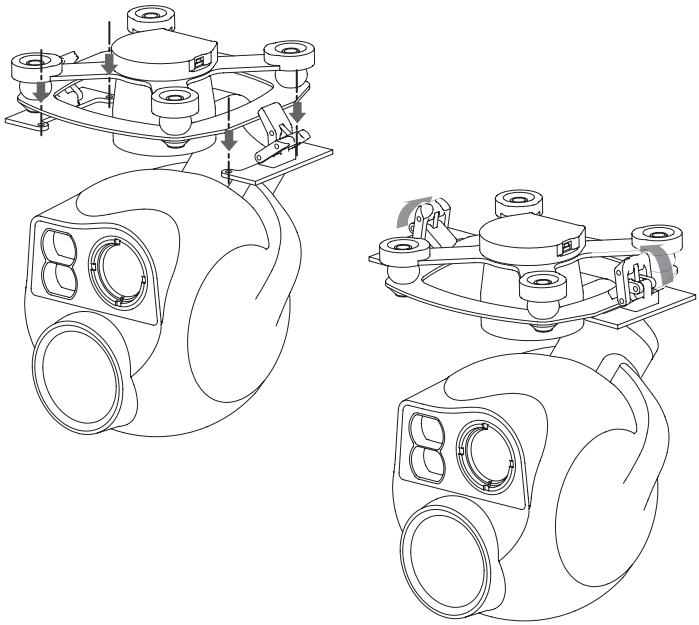

⚠ While upward mounted or mounted at carriers with large vibration or impact, the pod should be fixed with screws nor the quick-release locks.

⚠ Gently plug or unplug the cable. Avoid hardly pull the cable.

⚠ Ensure the microSD card slot cover is firmly in place to prevent dust or moisture entering during usage or storage.

⚠ The pod heats while operating. Please ensure the device good cooling.

⚠ Do not hard-connect the pod to the carrier , and make sure that the pod does not come into contact with the carrier during use.

Configuration & Upgrading

⚠ Ensure the gimbal and the GCU have both been upgraded to the latest firmware before use. Otherwise, usage may be affected.

⚠ Ensure the diver of the config module is installed on the computer before configuration or upgrading.

⚠ Before configuration, the computer should be set to a static IP address, which is in the same network segment with the GCU and the camera (without IP address conflicts). The default IP address of the GCU and the camera are 192.168.144.121 and 192.168.144.108, and an interior reserved IP address is 192.168.144.199.

⚠ Do not power off the device while upgrading. Restart the device once the upgrading is complete.

1. Connect the computer and ETH port with the Network Conversion Module. Power on the devices.
2. Run the Dragonfly display and control software to confirm that it is connected to the pod. Open the settings page.
3. When the settings are complete, click "Save".
4. Restart the pod to enable the configurations to take effect.

For instructions on Net Settings, CAMERA, S.BUS Setting, Calibration, Carrier, and Advance, please refer to the 《Dragonfly Quick Start Guide》- Ribbon - Settings, or visit the www.allxianfei.com to get information in the Video Center.

AICore Upgrading

1. Connect the computer and ETH port with the Network Conversion Module. Power on the device.
2. Run AICore Upgrade Tool software. Input current camera IP address and click "Connect".
3. Drag the firmware file. Click "Firmware Download" and wait for the download completing.
4. Restart the pod to enable the upgrading to take effect.

GCU Upgrading

1. Connect the computer and UART port with the J1.25 Config Module.
2. Run FreeFlightIAP software. Choose the COM port corresponding to the config module.
3. Click "browse", choose the firmware file, click "download" and wait for the upgrading complete.

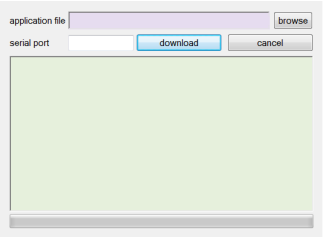

Visit the www.allxianfei.com for more information in the Video Center.

Gimbal Upgrading

1. Connect the computer and the upgrade port with the J1.25 Config Module. Power on the device.
2. Run GimbalConfig software. Choose the COM port corresponding to the config module. Click "Open Firmware" , choose the firmware file, click "Start Upgrade" and wait for the upgrading complete.

For some brands of dual Type-C cables, there may be cases where the computer cannot recognize the Config Module. Please try replacing it with a Type-A to Type-C cable.

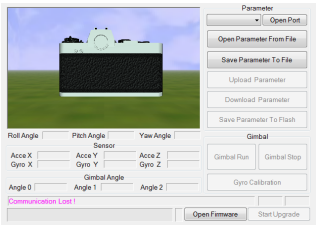

Visit the www.allxianfei.com for more information in the Video Center.

Real-time Video Playing

Example as camera IP address 192.168.144.108:
Stream address: rtsp://192.168.144.108

Appendix 1 Dimensions

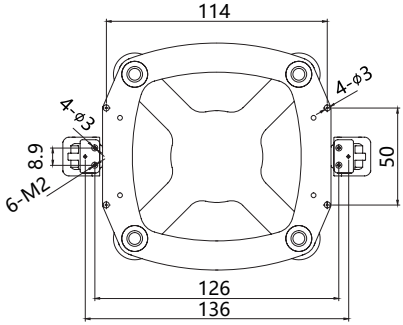

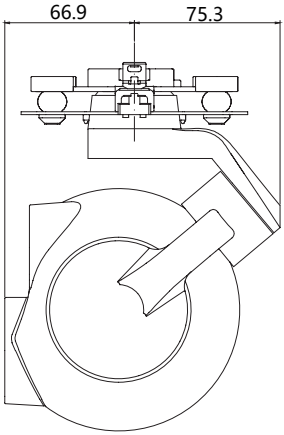

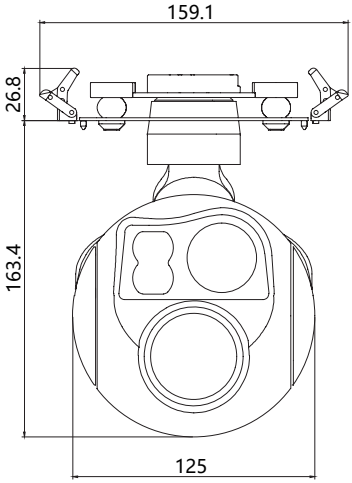

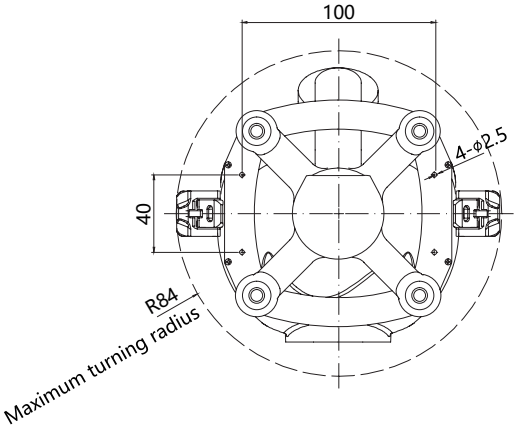

Unit: mm

Appendix 2 SEI Data Structure

```
typedef struct // 64 bytes. Little-endian byte order. Byte alignment
{
    uint8_t head[2]; // Header [0xEE, 0x16]
    struct
    {
        uint8_t rng_trig:1; // Ranging trigger flag
        uint8_t_pip_state:3; // Pic-in-Pic Statue
                    0-Zoom camera (main)+Thermal camera (sub);
                        1-Thermal camera;
                    2-Thermal camera (main)+ Zoom camera (sub);
                        3-Zoom camera
        uint8_t data_valid:1; //Validity flag of carrier's coordinate, carrier's attitude
                    and pod's attitude
        uint8_t tgt_valid:1; //Validity flag of target's coordinate
        uint8_t reserved:2; // Reserved flag
    } flag;
    int32_t uav_lon; // Longitude of carrier. [-180° , 180° ). Resolution 1e-7deg
    int32_t uav_lat; // Latitude of carrier. [-90° , 90° ]. Resolution1e-7deg
    int32_t uav_alt; // Altitude of carrier. Resolution 1mm
    int32_t uav_hgt; // Relative height of carrier. Resolution 1mm
    int16_t uav_phi; // Roll angle of carrier. [-180° , 180° ). Resolution 0.01deg
    int16_t uav_the; // Pitch angle of carrier. [-90° , 90° ]. Resolution 0.01deg
    uint16_t uav_psi; // Yaw angle of carrier. [0° , 360° ). Resolution 0.01deg
    int16_t cam_phi; // Roll angle of pod. [-90° , 90° ]. Resolution 0.01deg
    int16_t cam_the; // Pitch angle of pod. [-180° , 180° ). Resolution 0.01deg
    uint16_t cam_psi; // Yaw angle of pod. [0° , 360° ). Resolution 0.01deg
    uint16_t cam1_zoom; // Zoom rate of zoom camera. Resolution 0.01x
    uint16_t cam2_zoom; // Zoom rate of thermal camera. Resolution 0.01x
    uint16_t rng_dist; // Distance from target. Resolution 0.1m (Invalid, 0)
    uint16_t gnss_week; //GNSS week
    uint32_t gnss_itow; //GNSS microsecond. Resolution 1ms
    int32_t tgt_lon; // Longitude of target. [-180° , 180° ). Resolution 1e-7deg  (Invalid, 0)
    int32_t tgt_lat; // Latitude of target. [-90° , 90° ]. Resolution 1e-7deg (Invalid, 0)
    int32_t tgt_alt; // Altitude of target. Resolution 1mm (Invalid, 0)
    uint16_t cam1_fl1x; // Focal length of zoom camera at 1x. Resolution 0.01mm
    uint16_t cam2_f1x; // Focal length of thermal camera at 1x. Resolution 0.01mm
    uint8_t reserved[4]; // Reserved
    uint8_t check_sum; // Checksum
} SdSei_t;
```

Appendix 3 MAVLink Configuration

ArduPilot

SERIAL1	
SERIAL1_BAUD	115
SERIAL1_OPTIONS	1024
SERIAL1_PROTOCOL	2
SR1	
SR1_ADSB	0 Hz
SR1_EXIT_STAT	0 Hz
SR1_EXTRA1	0 Hz
SR1_EXTRA2	0 Hz
SR1_EXTRA3	0 Hz
SR1_PARAMS	0 Hz
SR1_POSITION	0 Hz
SR1_RAW_CTRL	0 Hz
SR1_RAW_SENS	0 Hz
SR1_RC_CHAN	0 Hz
MNT1	
MNT1_TYPE	4 (Gremsy) / 6 (SToRM32 Mavlink)
RC1	
RC1_OPTION	213 (MOUNT1_PITCH)
RC2	
RC2_OPTION	214 (MOUNT1_YAW)
RC3	
RC3_OPTION	163 (MOUNT1_LOCK)
CAM	
CAM_TRIGG_TYPE	3 (Mount)

The MNT1_TYPE is recommended as 6. The MNT1_ROLL_MAX, MNT1_ROLL_MIN, MNT1_PITCH_MAX, MNT1_PITCH_MIN, MNT1_YAW_MAX and MNT1_YAW_MIN will be configured automatically depend on data from the GCU. The angle limit should be set manual while the MNT1_TYPE is 4.

The RC1~RC3 are just examples, which can be defined according to actual situation.

PX4

MAVLink	
MAV_1_CONFIG	TELEM2
MAV_1_MODE	Custom / Gimbal
MAV_1_RATE	115200 B/s
Serial	
SER_TEL2_BAUD	115200 8N1
Mount	
MNT_MAIN_PITCH	AUX1
MNT_MAIN_YAW	AUX2
MNT_MODE_IN	Auto (RC and Mavlink Gimbal)
MNT_MODE_OUT	MAVLink gimbal protocol v2
Camera Setup	
Trigger mode	Distance based, on command (Survey mode)
Trigger interface	MAVLink (forward via MAV_CMD_IMAGE_START_CAPTURE)

The MAV_1_MODE is recommended as Custom.

The AUX1 and AUX2 are just examples, which can be defined according to actual situation. It should be configured in RC Map for further application.

The trigger mode is just an example, which can be modified according to actual situation.

Appendix 4 MAVlink Communication Process

After receiving HeartBeat from the flight controller, and identifying SYSID and COMPID of the flight controller, GCU will operate as below:

1. GCU actively sends package *MAVLINK_MSG_ID_HEARTBEAT 0* at a frequency of 2Hz.
2. GCU requests following packages in turn at a frequency of 1Hz. The flight controller fills these parameters into package *MAVLINK_MSG_ID_COMMAND_LONG 76* until the request completing.：
   MAVLINK_MSG_ID_EKF_STATUS_REPORT 193 (No this package for PX4);
   MAVLINK_MSG_ID_GLOBAL_POSITION_INT 33;
   MAVLINK_MSG_ID_SCALED_IMU 26;
   MAVLINK_MSG_ID_SYSTEM_TIME 2;
   MAVLINK_MSG_ID_RC_CHANNELS 65;
   MAVLINK_MSG_ID_CAMERA_TRIGGER 112 (No this package for APM);
   MAVLINK_MSG_ID_AUTOPILOT_STATE_FOR_GIMBAL_DEVICE 286;
   MAVLINK_MSG_ID_GIMBAL_DEVICE_SET_ATTITUDE 284 (No this package for APM);
3. GCU actively sends package *MAVLINK_MSG_ID_GIMBAL_DEVICE_ATTITUDE_STATUS 285* at a frequency of 100 Hz while the packages above being received and the pod being operational.
4. Generally, the flight controller will request package *MAVLINK_MSG_ID_GIMBAL_DEVICE_INFORMATION 283*, which GCU does not send actively.
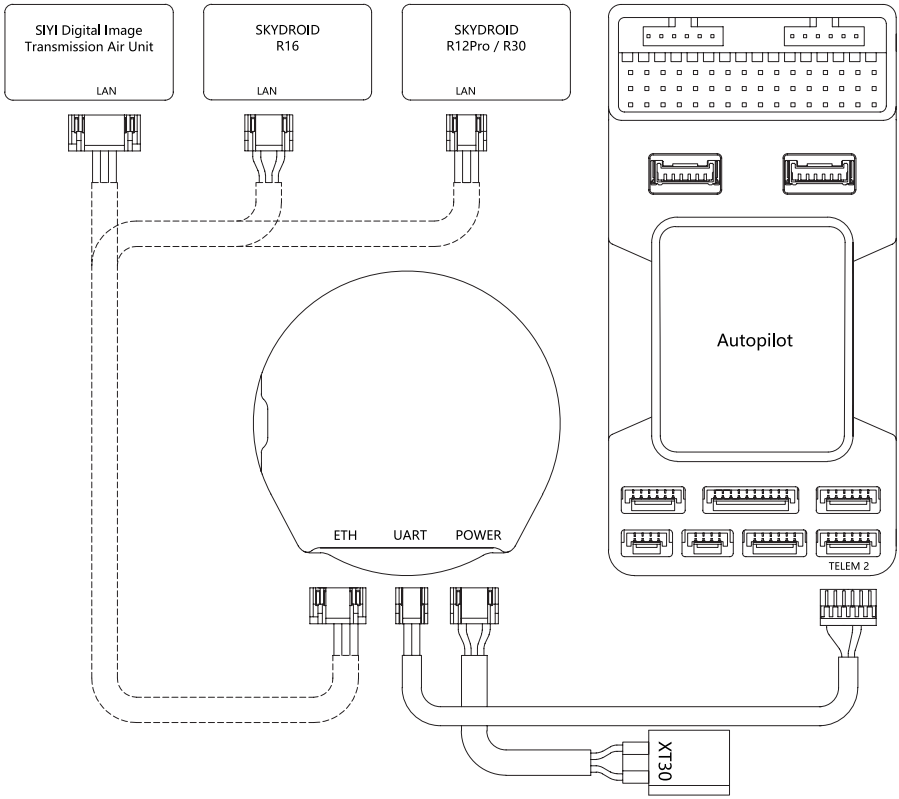
Appendix 5 Wiring Diagram of Connecting to Open Source Autopilot